How to measure your Gondola FlexRoller

Correct measurements of your existing gondola shelf are very important, because the Gondola FlexRoller is manufactured to utilize all available horizontal space. Below is a step by step guide on how to measure your existing shelving to ensure the correct Gondola FlexRoller fit. Record your information in the box at the bottom of the page.

Instructions

a. Determine the Gondola manufacturer of your existing shelf.

b. Measure the width of the existing Gondola shelf. Provide the outside dimensions (left to right) of your existing Gondola shelf.

c. Measure the depth of the existing Gondola shelf. Provide the dimension from the front of the shelf to the pegboard.

d. What color is your shelving?

e. How many facings per shelf?

b.

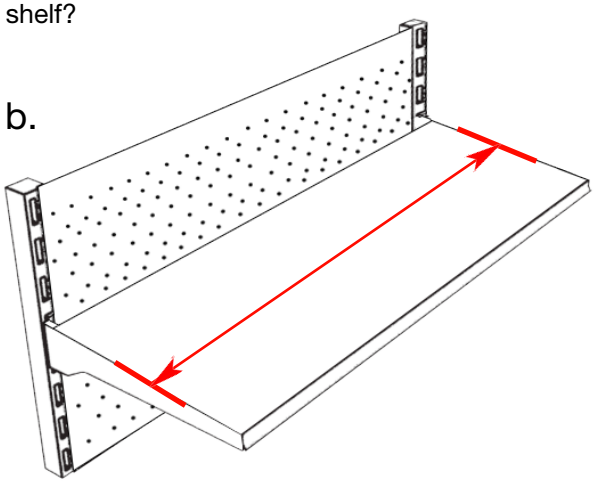

c.

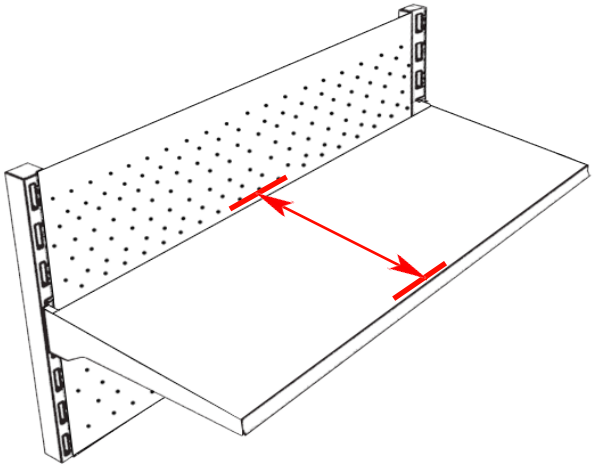

Recording the Measurements

Store details:

- Store Address _____
- Manager Name _____
- City, State Zip _____
- Telephone Number _____
- Store name _____
- Store number _____

	Shelf #1	Shelf #2
Gondola manufacturer		
Width (inches) (outer left to right)		
Depth (inches) (front to pegboard)		
Number of shelves		
Shelf color		
Number of facings per shelf		